THE VIRTUAL MEET EXPERIENCE

2019 - 2020

HS VIRTUAL CHALLENGE MEET #2

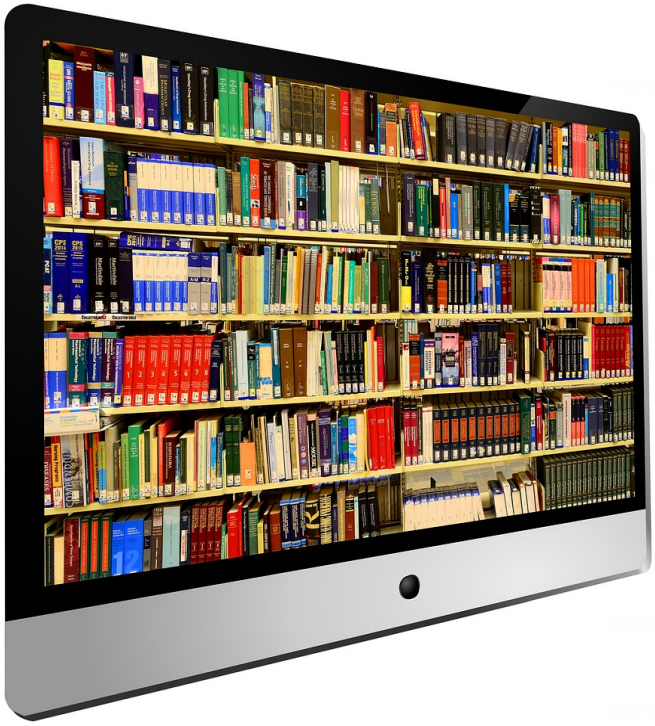

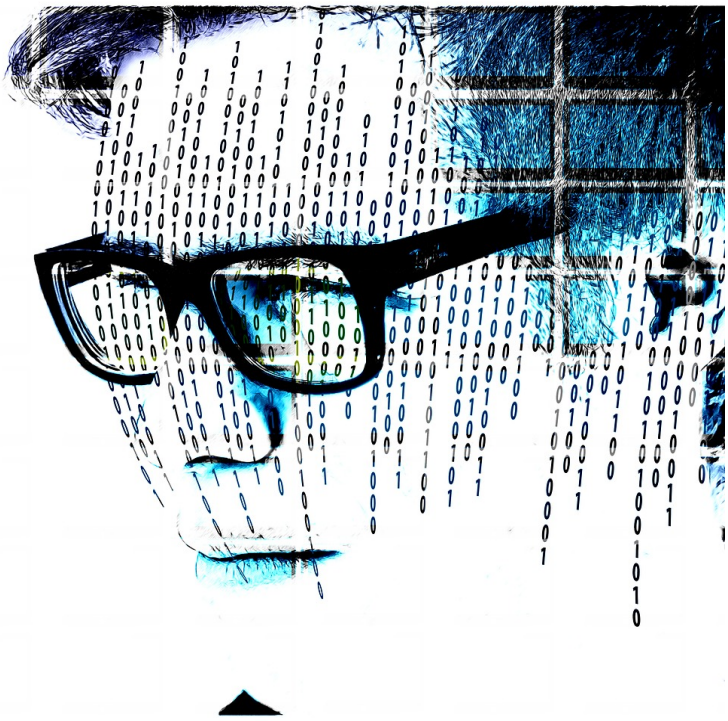

COMPUTER SCIENCE

DO NOT OPEN TEST UNTIL TOLD TO DO SO

2019-2020 Virtual Challenge Meet #2 – Computer Science

Note: Correct responses are based on Java, **J2sdk v 1.7.25**, from Sun Microsystems, Inc. All provided code segments are intended to be syntactically correct, unless otherwise stated (i. e. `error` is an answer choice) and any necessary Java 2 Standard Packages have been imported. Ignore any typographical errors and assume any undefined variables are defined as used. **For all output statements, assume that the System class has been statically imported…** ***import static java.lang.System.*;***

QUESTION 1

Which of the following is equivalent to the expression `0b1001010`?

A. 74_{10} B. 1020_4 C. 116_8 D. $4B_{16}$ E. All are equivalent

QUESTION 2

What is output by the code to the right?

A. `-2` B. `7`
C. `4`
D. There is no output due to a compile error.
E. There is no output due to a runtime error.

```
out.println(9 + 75/25 - 5);
```

QUESTION 3

What is output by the code to the right?

A. `000000003.142` B. `0003.142`
C. `3.14200000000` D. `3.142000`
E. There is no output due to a compile error.

```
out.printf("%08.3f", Math.PI);
```

QUESTION 4

What is output by the code to the right?

A. `box`
B. `true`
C. `false`
D. `boxes`
E. There is no output due to a compile error.

```
String s = "box";
String t = "boxes";
out.println(s.equals(t.substring(0,3)
));
```

QUESTION 5

What is output by the code to the right?

A. `True` B. `False` C. `false` D. `true`
E. There is no output due to a syntax error.

```
boolean b = true;
boolean r = b^true|false;
out.println(r);
```

QUESTION 6

What is output by the code to the right?

A. `88` B. `89` C. `88.0` D. `89.0`
E. There is no output due to an error.

```
double d = Math.floor(Math.max(77.7,
88.8));
out.println(d);
```

QUESTION 7

What is the output by the code to the right?

A. `Fresh` B. `Frozen`
C. `FreshFrozen` D. `Fresh Frozen`
E. `Frozen Fresh`

```
String s = "100 % always fresh never
frozen ice";
if(s.length() > 16) {
 System.out.print("Fresh");
}
System.out.println("Frozen");
```

QUESTION 8

What is the output by the code to the right?

A. 10 B. 5

C. 0

D. There is no output due to a runtime error.

E. There is no output due to an infinite loop.

```
int s = 5;int g = 0;
while(5 > 0){
 s--;g+= 2;
}
out.println(g);
```

QUESTION 9

What is output by the code to the right?

A. ss B. truess

C. truessnull

D. There is no output due to a compile error;

E. There is no output due to a runtime error.

```
out.println(true + "ss" + null);
```

QUESTION 10

What is the output by the code to the right ?

A. 1210 B. null

C. null1210 D. 22

E. There is no output due to a runtime error.

```
String [] s = new String [4];
s[3] = "10"; s[0] = "12";
out.println(s[1] + s[0] + s[3]);
```

QUESTION 11

Which of the following values can be in `n.txt` so that the code runs without error?

A. 17.98

B. FishSticks

C. 2147483648

D. All of the above.

E. None of the above.

```
File n=new File("n.txt");
Scanner sc=new Scanner(n);
String s=sc.nextLong();
```

QUESTION 12

What is the output by the code to the right ?

A. 3 B. 8

C. 28 D. 2

E. 64

```
int total = 0;
for(int i = 0; i < 8; i++) {
 total += i;
}
out.println(total/8);
```

QUESTION 13

What is the correct order of precedence for the operators to the right ?

A. I, II, III, IV B. III, I, II, IV

C. III, II, IV, I D. IV, II, III, I

E. IV, III, I, II

```
I. +
II. >>
III. /
IV. ()
```

QUESTION 14

What is the output by the code to the right ?

A. 105 B. 1014

C. 54 D. 15

E. 9

```
out.println(Integer.toBinaryString(5)
+ 4);
```

QUESTION 15

What is the output by the code to the right ?

A. 57

B. 552

C. 562

D. 58

E. There is no output due to an error.

```
ArrayList <Integer> ar = new ArrayList
<Integer>();
ar.add(55);
ar.add(56);
ar.add(5);
out.println(ar.remove(1) + ar.size());
```

QUESTION 16

What is the output by the code to the right ?

A. 7 B. 4

C. 6 D. 3

E. There is no output due to a syntax error.

```
out.println(4|3);
```

QUESTION 17

What is the output by the line marked //1 in the code to the right ?

A. true B.65

C. false D.77

E. There is no output due to an error.

QUESTION 18

What is output by the line marked //2 in the code to the right?

A. 2
B. 3
C. 4
D. 1
E. There is no output due to an error.

```
Stack <Integer> s = new Stack
<Integer>();
s.push(65);
s.add(77);
int i = s.peek();
int x = s.pop();
out.println(i == x);//1
s.push(65);
s.push(77);
s.peek();
out.println(s.size());//2
```

QUESTION 19

What is output by the code to the right?

A. false B. true
C. chicken
D. There is no output due to a runtime error.
E. No output due to a compile error.

```
String s = "chicken";
String f = "çhicken";
out.println(s == f);
```

QUESTION 20

Which of the following is a valid variable name?

A. @k B.#ui C. int D. true E. None of the above.

QUESTION 21

What is the output by the code to the right ?

A. American
B. Cheddar
C. Goulda
D. Swiss
E. There is no output due to a runtime error.

```
ArrayList <String> cheese = new
ArrayList <String>();
cheese.add("American");
cheese.add("Cheddar");
cheese.add("Goulda");
cheese.add("Swiss");
Collections.sort(cheese);
out.println(cheese.get(cheese.size() -
1));
```

QUESTION 22

Which of the following could replace **<1*>** in the code to the right?

A. `<Integer>`

B. `<>`

C. `<Object>`

D. Only A and B

E. Only A and C

QUESTION 23

Which of the methods below could be used in place of the existing code or in conjunction with the existing code of the ends method without altering the intended function of the method?

A. `compareTo()`

B. `Collections.sort()`

C. `Collections.max()`

D. `Integer.compare()`

E. All of the above

QUESTION 24

Assuming that **<1*>** is filled correctly, what is the output by `//1` ?

A. `[1272, 1273, 1274, 1275, 1276, 1277]`

B. `[1277, 1272, 1273, 1274, 1275, 1276]`

C. `[1276, 1277, 1272, 1273, 1274, 1275]`

D. `[1275, 1276, 1277, 1272, 1273, 1274]`

E. `[1274, 1275, 1276, 1277, 1272, 1273]`

QUESTION 25

Assuming that **<1*>** is filled correctly, what is the output by `//2` ?

A. `1272`

B. `1276`

C. `1277`

D. `1276`

E. There is no output due to a runtime error

```
class Road{
String name;
ArrayList <Integer> addresses;
public Road() {
 name = "Funky Road";
 addresses = new
ArrayList<Integer>();
}
public Road(String s, ArrayList l) {
 name = s;
 addresses = l;
}
public ArrayList houses() {
 return addresses;
}
public int ends() {
 int end = 0;
 for(int i = 0; i < addresses.size();
i++) {
  if(addresses.get(i) > end) {
   end = addresses.get(i);
  }
 }
 return end;
}
}

///////////client code//////////////
ArrayList <1*> ar = new
ArrayList<1*>();
ar.add(1272);ar.add(1273);ar.add(1274
);
ar.add(1275);ar.add(1276);ar.add(1277
);
Road r = new Road("Abbey Road", ar);
out.println(r.houses());//1
out.println(r.ends());//2
```

QUESTION 26

What is output by the code to the right?

A. `Ch`

B. `stry Ch`

C. `mistry`

D. `m`

E. There is no output due to a runtime error.

```
String s = "Geometry Chemistry
Chicken";
String [] ss = s.split("[ ei]");
out.println(ss[4]);
```

QUESTION 27

What does the output by the code to the right represent?

A. The maximum bits an integer can store
B. The amount of bits stored in any integer
C. The base 2 representation of `Integer.MAX_VALUE`
D. The minimum amount of bits an integer can store
E. There is no output due to a syntax error.

```
out.println(Integer.bitCount(Integer.MAX_VALUE));
```

QUESTION 28

What is output by the line marked `//1`?

A. `nono`
B. `35=nono`
C. `bruh moment`
D. `35=bruh moment`
E. There is no output due to an error.

QUESTION 29

What is output by the line marked `//2`?

A. `90=yeahyeah`
B. `2=cheese`
C. `yeahyeah`
D. `cheese`
E. There is no output due to an error.

```
TreeMap <Integer, String> map;
map = new TreeMap<Integer, String>();
map.put(35, "nono");
map.put(22, "ohno");
map.put(90, "yeahyeah");
map.put(35, "bruh moment");
out.print(map.get(35));   //1
map.put(2, "cheese");
out.print(map.lastEntry());   //2
```

QUESTION 30

What is the output by the code to the right?

A. `****909.000`
B. `****910.000`
C. `909.000****`
D. `910.000****`
E. There is no output due to an error

```
out.printf("****%.3f",
Math.abs(Math.ceil(-909.7)));
```

QUESTION 31

What is the value of the postfix expression to the right(use integer division)?

A. 94 B. 46 C. 50 D. 30 E. 71

```
7 8 5 + * 3 +
```

QUESTION 32

Which line to the right will cause a compile error?

A. `//1` B. `//2`
C. `//3` D. `//4`
E. None of the above.

QUESTION 33

What is the output by the code to the right?

A. 81 B. 81 729
C. 9 81 D. 81 729 0
E. None of the above.

```
int i = 81;
switch(i) {
case 9: out.print(9 + " ");//1
case 81: out.print(81 + " ");//2
case 729: out.print(729 + " ");//3
default: out.print(0 + " ");//4
}
```

QUESTION 34

What could replace **<1*>** in the code to the right, so the code will compile without error?

A. `T`
B. `E`
C. `Object`
D. More than one of the above.
E. None of the above.

QUESTION 35

What could replace **<2*>** in the client code to initialize a `Structure` object called `s`?

A. `Structure<String> s=new Structure<String>();`
B. `Structure s=new Structure();`
C. `Structure<String>s=new Structure<>();`
D. None of the above.
E. More than one of the above..

QUESTION 36

Assuming that **<1*>** and **<2*>** have been completed correctly, what is output by the line marked `//1`?

A. `Duck Life`
B. `Duck Life 2`
C. `Duck Life 4`
D. `Duck Life 5`
E. There is no output due to an error.

QUESTION 37

Assuming that **<1*>** and **<2*>** have been completed correctly, what is output by the line marked `//2`?

A. `Duck Life 5`
B. `Duck Life`
C. `Duck Life 4`
D. There is no output due to a compile error.
E. There is no output due to a runtime error.

QUESTION 38

Which of the following data structures is implemented by the code to the right ?

A. Linked List
B. Priority Queue
C. Hashtable
D. Stack
E. Set

```
class Structure< <1*> >{
 LinkedList < <1*> > list;
 public Structure() {
  list = new LinkedList< <1*> >();
 }
 public void add( <1*>  e) {
  list.add(e);
 }
 public void push( <1*> e) throws
Exception{
  list.add(e);
 }
 public <1*>  remove() {
  return list.remove();
 }
 public <1*>  remove(int index) {
  return list.remove(index);
 }
 public <1*>  pop() throws Exception{
  return list.removeLast();
 }
 public <1*>  peek() throws Exception{
  return list.getLast();
 }
 public boolean empty() {
  return list.isEmpty();
 }
}
//////////client code/////////////////
<2*>
s.push("Duck Life");
s.push("Duck life 2");
s.push("Duck Life 3");
s.push("Duck Life 4");
s.push("Duck Life 5");
out.println(s.pop());//1
out.print(s.remove(4));//2
```

QUESTION 39

What is the path from node A to G in the following graph with the lowest cost? List the nodes that will be visited. Include A and G in the path when you list the nodes that will be visited. Only the list of nodes will be accepted as an aswer.

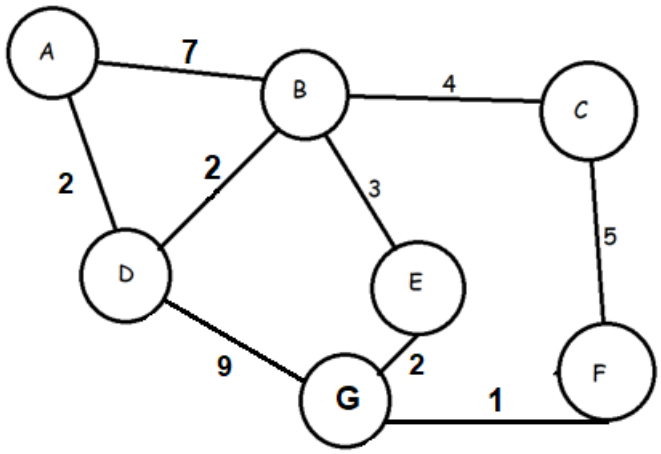

QUESTION 40

What is the most simplified form of the following boolean algebra expression ?

```
( A && B && C ) || ( A && B || C ) || ( A || B && C ) || ( A && C || B )
```

Name _____ Final Score _____ _____

School _____ 2nd Grading _____ _____

Division: 1A 2A 3A 4A 5A 6A Grade: 9 10 11 12 1st Grading _____ _____
score initials

The Virtual Challenge Meets

Computer Science - Student Answer Sheet

1) _____
2) _____
3) _____
4) _____
5) _____
6) _____
7) _____
8) _____
9) _____
10) _____

11) _____
12) _____
13) _____
14) _____
15) _____
16) _____
17) _____
18) _____
19) _____
20) _____

21) _____
22) _____
23) _____
24) _____
25) _____
26) _____
27) _____
28) _____
29) _____
30) _____

31) _____
32) _____
33) _____
34) _____
35) _____
36) _____
37) _____
38) _____
39) _____
40) _____

Total Number Correct _____ x 6 = _____

Total Number Incorrect _____ x -2 = _____

Final Score (record here and top right) _____

2019-2020 Virtual Challenge Meet #2
Computer Science - KEY

1) A
2) B
3) B
4) B
5) C
6) C
7) C
8) E
9) C
10) C

11) C
12) A
13) E
14) B
15) D
16) A
17) A
18) B
19) B
20) E

21) D
22) E
23) E
24) A
25) C
26) D
27) A
28) C
29) A
30) A

31) A
32) E
33) D
34) D
35) E
36) D
37) E
38) D
39) ADBEG
40) A || B || C

Note to Graders:

- All provided code segments are intended to be syntactically correct, unless otherwise stated (e.g. error is an answer). **Ignore any typographical errors.**
- Any necessary Standard Java 2 Packages are assumed to have been imported as needed.
- Assume any undefined (undeclared) variables have been defined as used.

© A+ Computer Science – www.apluscompsci.com